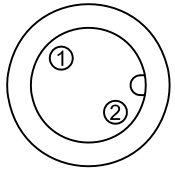

2Pin position

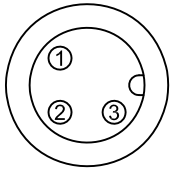

3Pin position

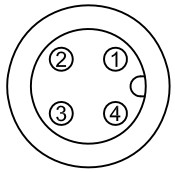

4Pin position

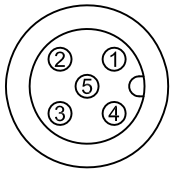

5Pin position

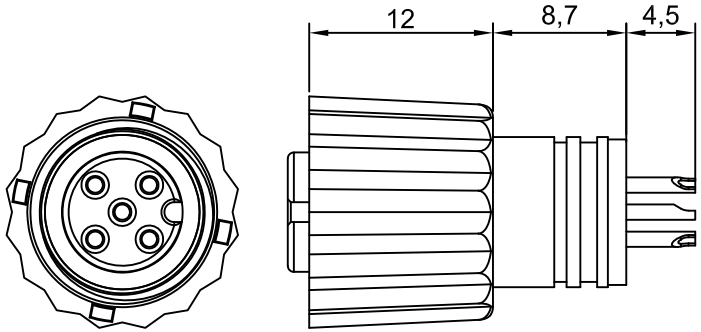

Assembly

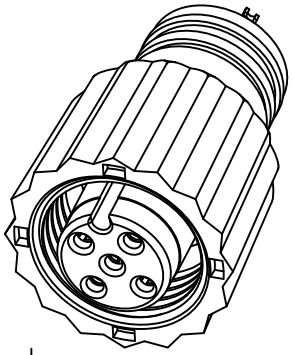

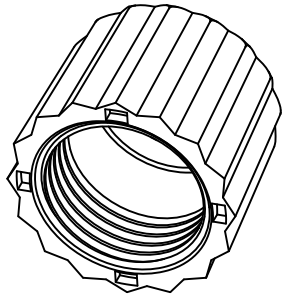

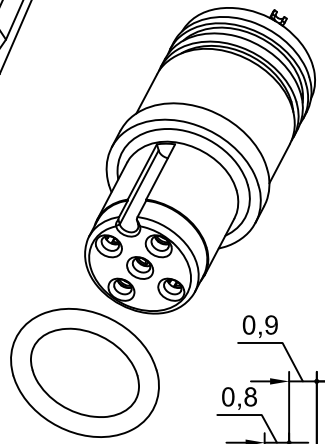

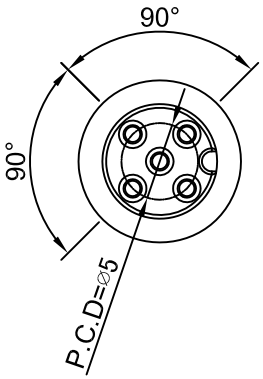

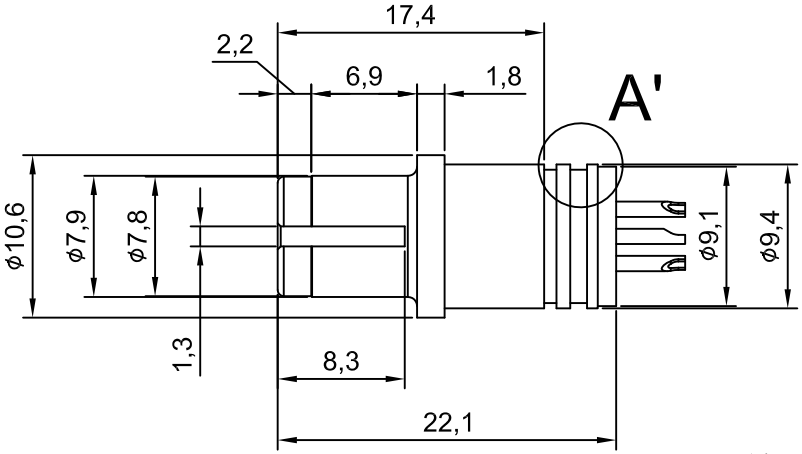

M12 2~5Pin Female Housing

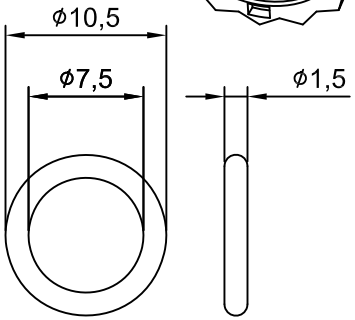

Ring

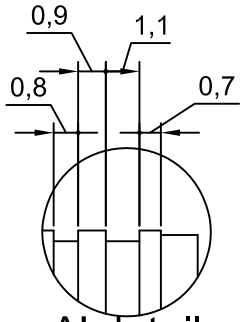

A' detail
(scale 4:1)

NOTES:
Current Rating: 3A
Breakdown Voltage: AC 500V/1 Minute
Insulation Resistance: 100MΩ at DC 500V
Temperature Range: -20°C to +80°C
Waterproof Rating: IP67 and IP68
Material: contact: Brass, gold plated 3μ inch
connector body: PA66+25%GF,Black
PA Lock: PA66+25%GF,Black
Ring: Silica Gel,Orange

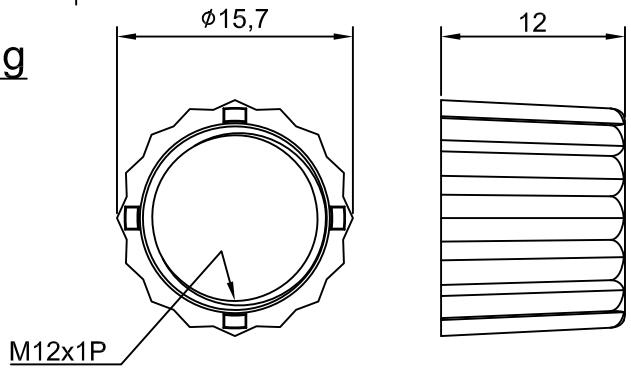

Female Lock

Hui Bao Wire & Cable Co.,LTD	CUST:	CUST P/N:	TITLE: M12 2~5Pin Female Housing Assy.		PERSPECTIVE	UNIT	SCALE	DATE	REV	SHEET
	HP P/N: HWP12-02~05FP	DWN.BY:	CHK. BY:	APPROVER:		mm	2:1	MAR/31/2012	A	1 OF 1